INDEX

SPECIFICATIONS 13A-2

STRUCTURE AND OPERATION
1. Fuel System (Flow of Fuel) 13A-3
2. Engine Control 13A-4
3. Fuel Filter 13A-5

TROUBLESHOOTING 13A-6

ON-VEHICLE INSPECTION AND ADJUSTMENT
1. Inspecting and Adjusting No-load Minimum and Maximum Speeds 13A-8
2. Air-bleeding of Fuel System 13A-9
3. Fuel Filter Replacement 13A-10

FUEL TANK
<OUT SIDE FRAME TYPE> 13A-12
<IN SIDE FRAME TYPE> 13A-14

FUEL FILTER 13A-16

ENGINE CONTROL 13A-18

COMMON RAIL 13A-22

SUPPLY PUMP 13A-26

INJECTOR 13A-30

Item			Specifications
Supply pump	Manufacturer		Bosch
	Model		CP3.3 NH
	Control method		Electronic
	Type		Radial, 3-cylinder
	Type		External gear type
	Injection quantity adjustment valve	Model	MPROP
		Rated voltage V	12
	Max. common rail pressure MPa {psi, kgf/cm^2}		180 {26100, 1840}
Common rail	Manufacturer		Bosch
	Common rail volume cm^3 {cu.in., ml}		18.7{1.14, 18.7}
	Pressure limiting valve opening pressure MPa {psi, kgf/cm^2}		210to 220 {30450 to 31900, 2140 to 2240}
	Common rail pressure sensor supply voltage V		5
Injectors	Manufacturer		Bosch
	Control method		Electrical
	Max. operating pressure MPa {psi, kgf/cm^2}		180 {26100, 1840}
	Min. operating pressure MPa {psi, kgf/cm^2}		25 {3630, 255}
Common rail electronic control unit	Manufacturer		Bosch
	Rated voltage V		12

1. Fuel System (Flow of Fuel)

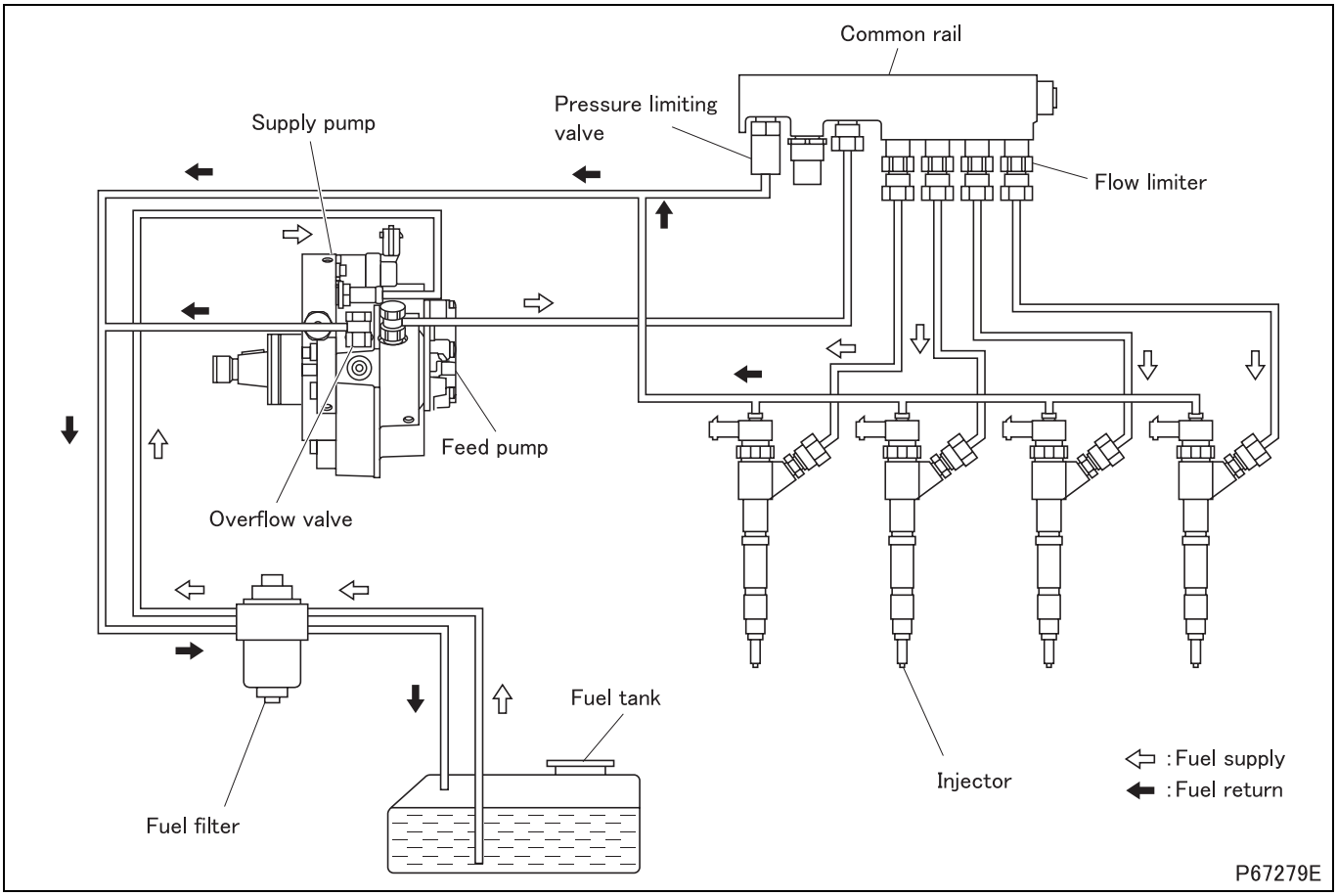

- The feed pump, which is driven by the camshaft inside the supply pump, draws up the fuel from inside the fuel tank and sends it through the fuel filter, where dust and other impurities in the fuel are filtered out.
- The filtered fuel is then sent to the supply pump, where it is compressed. The compressed fuel is accumulated in the common rail for a time, then sprayed out through the injection nozzles into the combustion chamber.
- If fuel leaks from an injection pipe at the pipe joint, the flow limiter is activated to close the fuel passage, preventing the fuel from flowing elsewhere.
- The excess fuel from the injectors returns to the fuel tank through the fuel return hose.
- When the internal fuel pressure of the Common Rail exceeds the limit, the pressure limiting valve opens to allow part of the fuel to return to the fuel tank.
- When the internal fuel pressure of the supply pump exceeds the limit, the overflow valve opens to allow part of the fuel to return to the fuel tank.

2. Engine Control

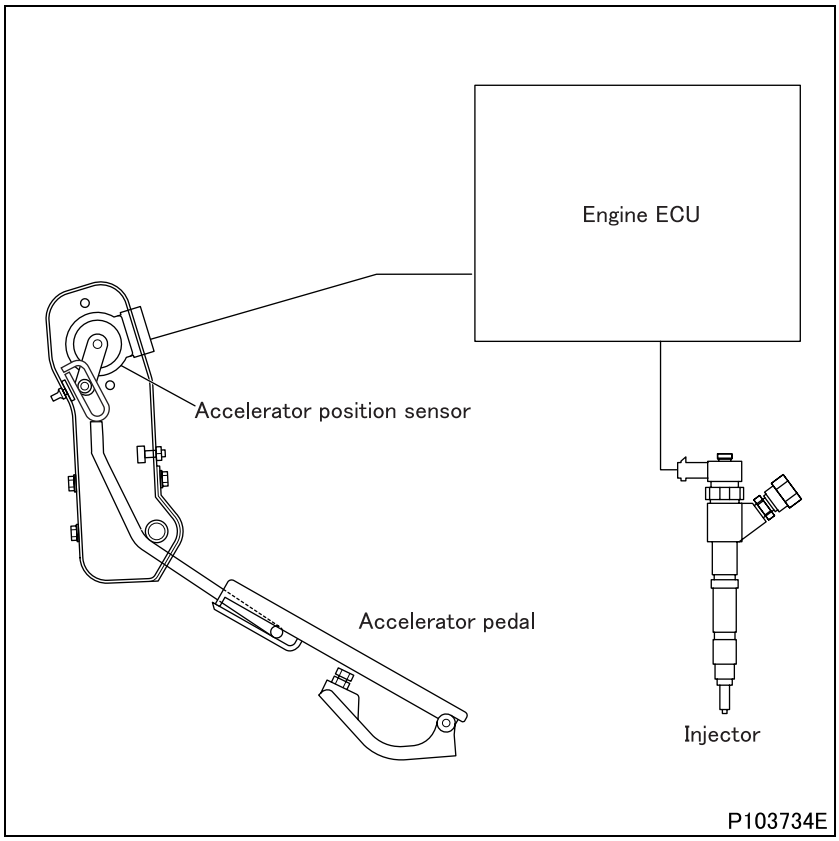

- The engine is electronically controlled by the engine electronic control unit (ECU).
- The accelerator position sensor detects how much the accelerator pedal is pressed and sends the corresponding electronic signal to the engine electronic control unit, which calculates an appropriate amount of fuel based on the signals and controls fuel injection accordingly.

3. Fuel Filter

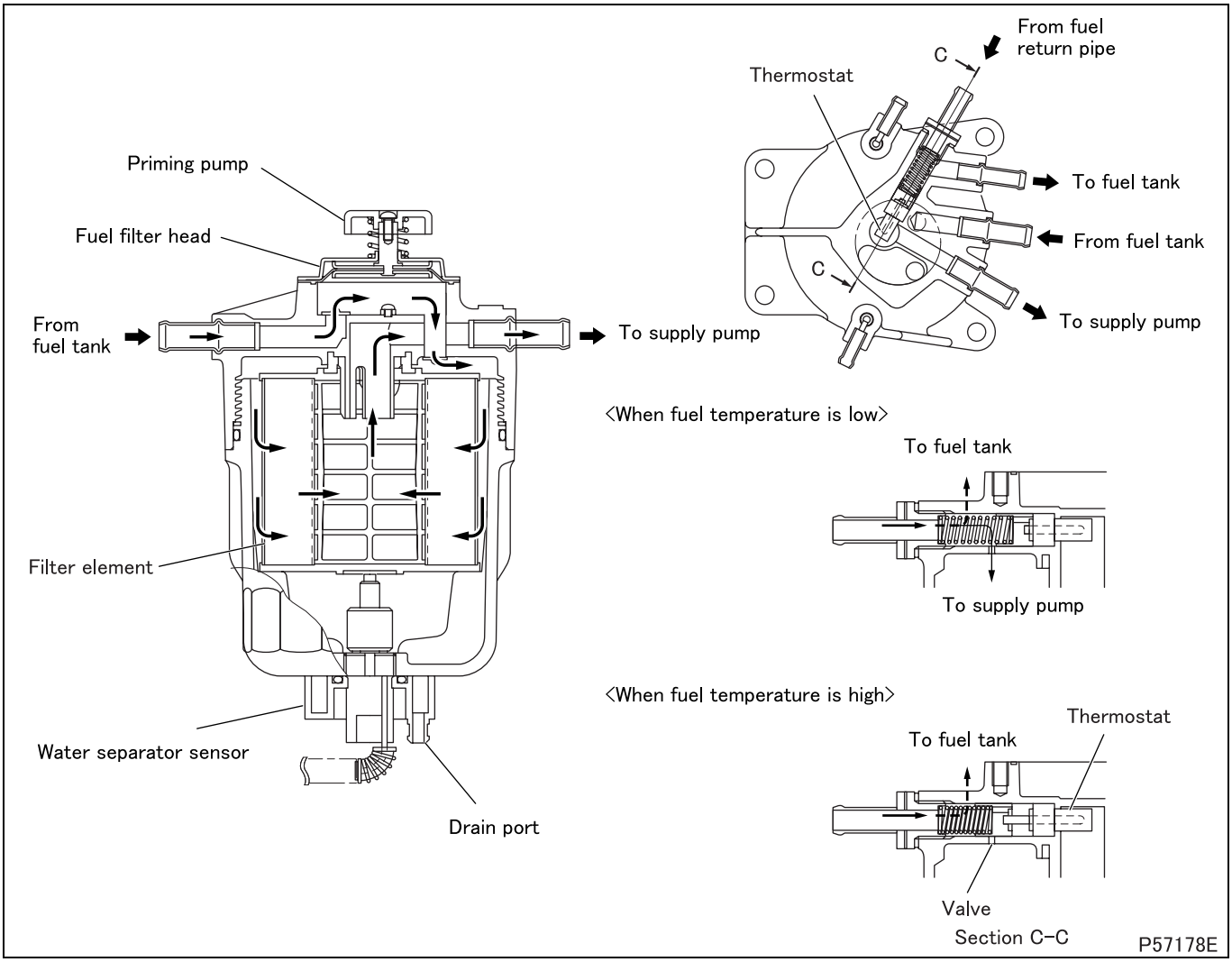

- The fuel filter removes impurities in the fuel through the filter element and also separates water from fuel.
- The water that has been separated from the fuel collects at the bottom of the fuel filter. A water separator sensor is installed in the fuel filter, which activates the warning lamp on the meter cluster when the water reaches a certain level.
- The water can be drained through the drain port by loosening the water separator sensor.
- A priming pump is provided at the fuel filter head. The priming pump is used for air-bleeding the fuel system.
- When the fuel temperature rises, the thermostat swells and the valve of the fuel filter head is closed. The high-temperature fuel entirely returns to the fuel tank through the fuel return pipe.
- When the fuel temperature lowers, the thermostat does not swell and the valve to the fuel filter remains open. The high-temperature fuel returning through the fuel return pipe is let through the valve to mix into the fuel around the element. The fuel around the element is warmed as a result and wax in it (precipitated when the fuel temperature is low) is dissolved to prevent clogging of the element.

Possible causes \ Symptoms		Engine refuses to start	Engine is difficult to start	Engine knocks	Engine output is unstable	Engine output is insufficient	Engine maximum speed is too high	Engine is idling unstably	Engine stops soon after starting	Engine does not reach maximum speed	Engine does not stop	Accelerator pedal is too stiff	Fuel supply is insufficient	warning lamp illuminates	Reference Gr
Faulty electronic fuel control system														O	Gr13E
Supply pump	Malfunctioning feed pump check valve		O			O			O		O				*
	Defective feed pump		O			O			O		O				*
	Poorly airtight supply pump overflow valve		O			O			O		O				*
	Open or short circuit failure, poor contact of supply pump M/V		O			O			O		O			O	*
	Defective supply pump M/V, defective supply pump		O			O			O		O				*
Injectors	Open or short circuit failure, poor contact of injector M/V		O	O		O					O			O	*
	Defective injector, defective injector M/V, defective nozzle		O	O		O					O				*
Clogged fuel filter		O			O			O	O						
No fuel in fuel tank		O													
Clogged fuel pipe and/or leaky pipe joints		O													
Air or water in fuel system		O			O			O	O						
Use of low quality fuel			O	O		O		O							
Open or short circuit failure, poor contact of common rail pressure sensor, defective sensor		O	O		O	O			O					O	*
Flow limiter activated				O		O								O	*
Fuel leakage from high pressure pipe joint			O	O	O	O					O				*
Engine control	Poorly adjusted accelerator pedal stopper bolt					O				O					
	Defective accelerator pedal position sensor													O	
Cracked fuel pipe and/or hose													O		

*: Contact a Bosch service station for repair.

Symptoms / Possible causes	Engine refuses to start	Engine is difficult to start	Engine knocks	Engine output is unstable	Engine output is insufficient	Engine maximum speed is too high	Engine is idling unstably	Engine stops soon after starting	Engine does not reach maximum speed	Engine does not stop	Accelerator pedal is too stiff	Fuel supply is insufficient	warning lamp illuminates	Reference Gr
Inappropriate oil viscosity		O					O							Gr12
Poorly adjusted valve clearance		O					O							Gr11
Defective cylinder head gasket		O					O							
Wear of and/or carbon deposits on valve and valve seat		O					O							
Distorted valve springs		O					O							
Worn or damaged piston rings		O					O							
Worn or damaged piston ring groove		O												
Worn piston and/or cylinder liner		O					O							
Poorly functioning cooling system		O					O							Gr14
Defective starter switch	O	O												Gr54
Defective glow plug		O												
Open-circuited, short-circuited or poorly connected engine speed sensor and/or cylinder sensor	O	O											O	Gr13E
Open-circuited, short-circuited or poorly connected boost pressure sensor			O	O	O				O				O	
Open-circuited, short-circuited or poorly connected coolant temperature sensor	O	O											O	
Poorly connected injection rate adjusting resistor			O		O								O	
Poorly connected idling adjustment control			O				O						O	
Blown fuse	O	O						O					O	Gr54

ON-VEHICLE INSPECTION AND ADJUSTMENT

1. Inspecting and Adjusting No-load Minimum and Maximum Speeds

Service standards

Location	Maintenance item	Standard value	Limit	Remedy
–	No-load minimum speed (idling speed)	650 ± 25 rpm	–	Adjust
–	No-load maximum speed	3,100 ± 50 rpm	–	Adjust

[Work before inspection and adjustment]

- Before starting the inspection and adjustment, carry out the following preparatory steps:
- Warm up the engine until the engine coolant temperature is approximately 80 to 95°C {176 to 203°F};
- turn off all lamps and accessories;
- put the transmission in neutral (P-range for automatic transmission);
- set the steering wheel at the straight-ahead position; and
- attach the probe of the tachometer to an infector.

[Inspection and adjustment]

(1) No-load minimum speed

- Without pressing the accelerator pedal, measure the engine speed.
- If the speed is not within the standard value range, inspect the accelerator position sensor and accelerator switch assembly. (See Gr13EA)
- If no defects are evident during the above inspection, check for any diagnosis codes related with the fuel system and inspect the supply pump and engine electronic control unit. (See Gr13EA)

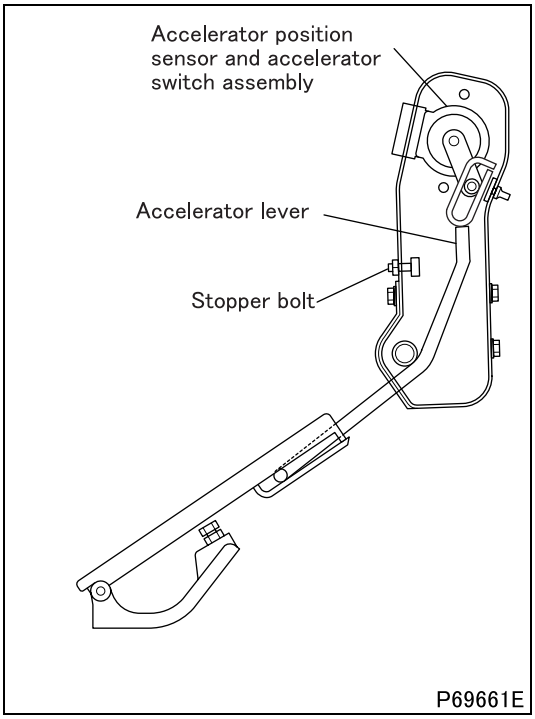

(2) No-load maximum speed

- Press the accelerator pedal as far as it will go.
- With the accelerator lever touching the stopper bolt, measure the engine speed.
- If the speed is not within the standard value range, inspect the accelerator position sensor and accelerator switch assembly. (See Gr13EA)
- If no defects are evident during the above inspection, check for any diagnosis codes related with the fuel system and inspect the supply pump and engine electronic control unit. (See Gr13EA)

2. Air-bleeding of Fuel System

Tightening torque (Unit: N·m {ft.lbs, kgf·m})

Mark	Parts to be tightened	Tightening torque	Remarks
–	Air vent plug	10 ± 2 {7.4 ± 1.5, 1 ± 0.2}	–

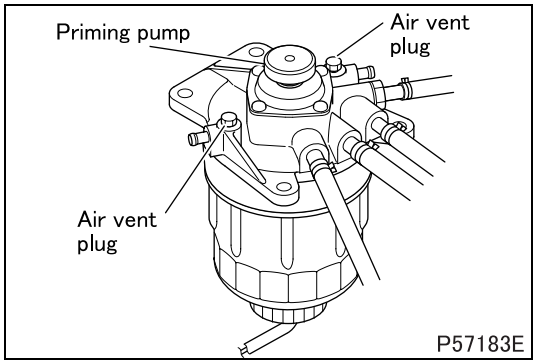

- Loosen one of the air vent plugs on the fuel filter.
- Move the priming pump up and down to pump out the fuel.
- Continue operating the priming pump until the fuel flowing out of the air vent plug is free of air bubbles.
- When no more air bubbles are evident, tighten the air vent plug to the specified torque.
- Feed the fuel some more by operating the priming pump further until a strong resistance is felt.

NOTE

- **When the fuel temperature is low, you may not feel the resistance. Be sure to operate the priming pump several times even in such a case.**

- Wipe up any spilled fuel and start the engine.
- Check that there is no fuel leakage.

WARNING ⚠

- **Fuel is highly flammable. Keep it away from flames and sources of heat.**
- **To avoid risk of fire, wipe up any spilled fuel.**

3. Fuel Filter Replacement

Tightening torque (Unit: N·m {ft.lbs, kgf·m})

Mark	Parts to be tightened	Tightening torque	Remarks
–	Water separator sensor	5 ± 1 {3.7 ± 0.7, 0.5 ± 0.1}	–
–	Case	30 ± 2 {22 ± 1.5, 3.1 ± 0.2}	–

Lubricant and/or sealant

Mark	Points of application	Specified lubricant and/or sealant	Quantity
–	Fuel filter gasket	Engine oil	As required

Special tools

Mark	Tool name and shape	Part No.	Application
a	Filter wrench 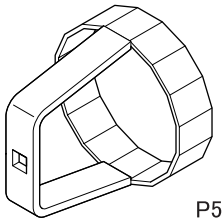 P57179	MH063203	Removal and installation of case

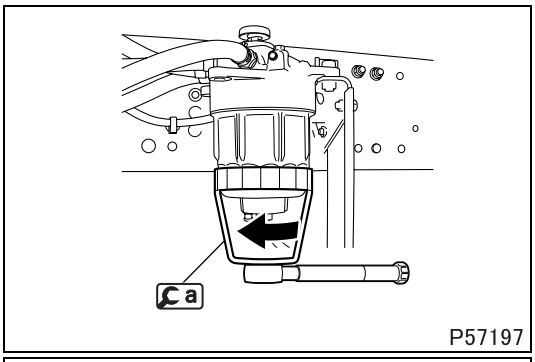

[Removal]

- Loosen the water separator sensor and drain fuel from the case.
- Remove the case using a.

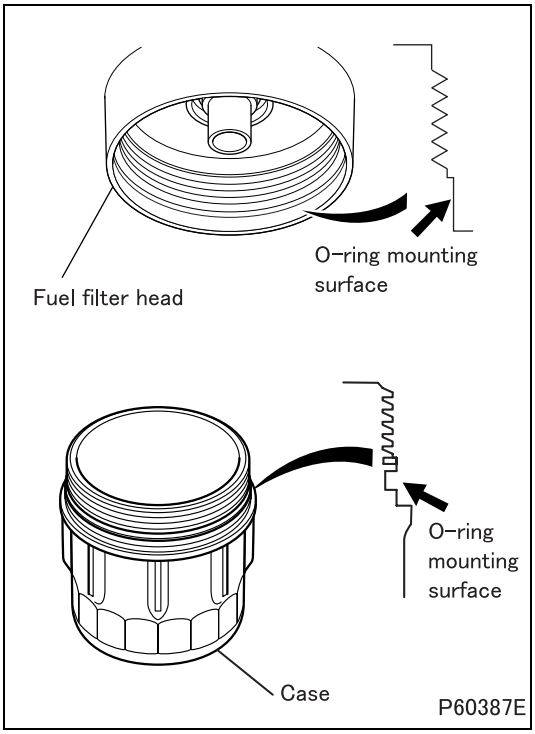

[Installation]

- Clean the O-ring mounting surface of the fuel filter head.

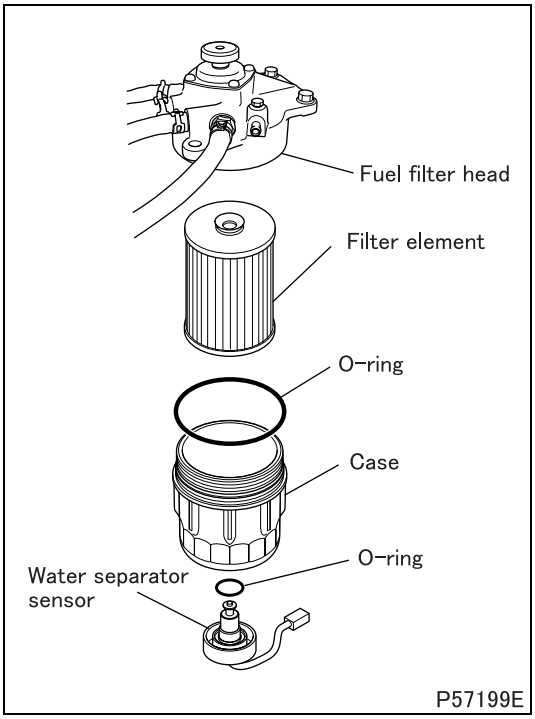

- Replace the filter element and O-ring with new one.
- Apply a thin coat of engine oil to the O-ring, and install it on the case and water separator sensor.

CAUTION ⚠

- **Be sure to use only genuine MITSUBISHI filter elements. The use of non-genuine fuel filters can cause engine failure.**
- **Prevent fine dust particles from entering the fuel filter and fuel pipe, as they can cause problems such as faulty fuel injection.**

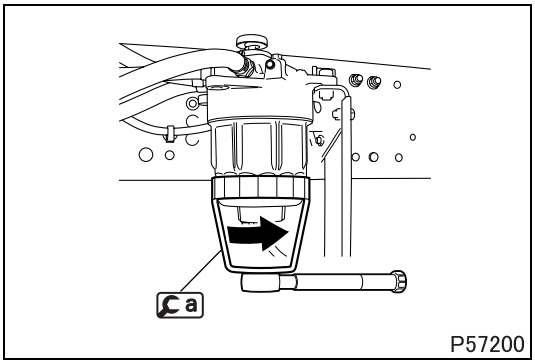

- Use a to tighten the case to the specified torque.
- Install the water separator sensor, and then air-bleed the fuel system.
- Start the engine, and check that there is no fuel leakage.
- Reinstall the fuel filter if there is any leakage.

FUEL TANK <OUT SIDE FRAME TYPE>

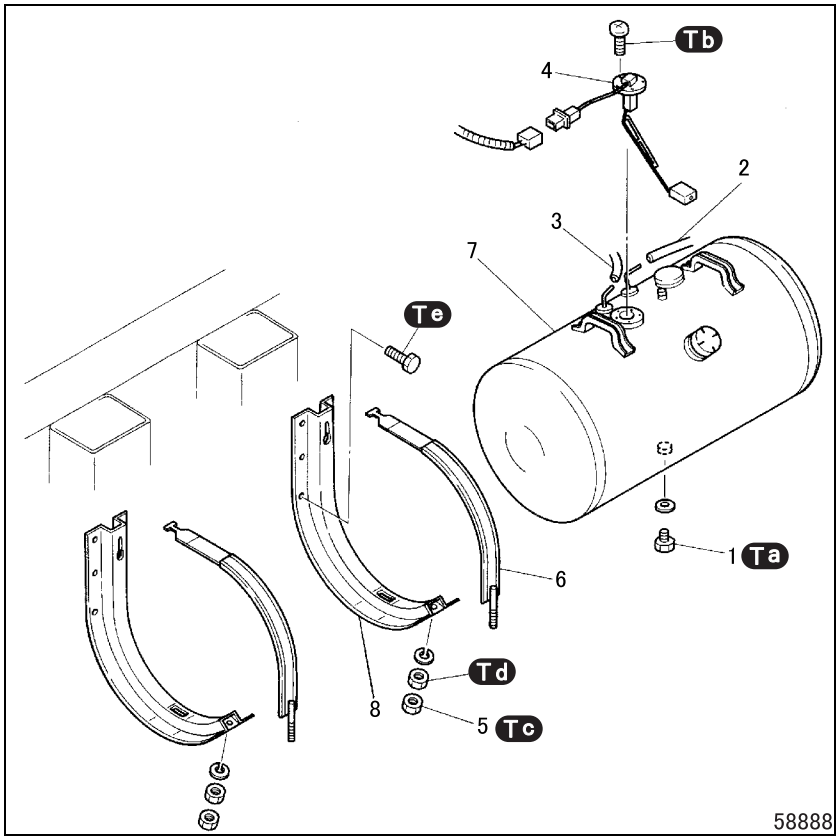

● **Removal sequence**

1 Drain plug
2 Suction hose
3 Return hose
4 Fuel level sensor
5 Lock nut
6 Fuel tank band
7 Fuel tank
8 Fuel tank bracket

● **Installation sequence**

Follow the removal sequence in reverse.

DANGER ⚠

- **Do not allow any flames or sources of heat near the fuel tank, as it may explode.**

WARNING ⚠

- **Fuel is highly flammable. Keep it away from flames and sources of heat.**
- **To avoid risk of fire, wipe up any spilled fuel.**

Tightening torque (Unit: N·m {ft.lbs, kgf·m})

Mark	Parts to be tightened	Tightening torque	Remarks
Ta	Drain plug	49 to 88.2 {36 to 65, 5.0 to 9.0}	–
Tb	Screw (fuel level sensor mounting)	0.98 to 1.47 {0.7 to 1.1, 0.10 to 0.15}	–
Tc	Lock nut (fuel tank band mounting)	9 to 28 {6.6 to 21, 0.9 to 2.8}	–
Td	Nut (fuel tank band mounting)	6 to 10 {4.4 to 7.4, 0.6 to 1.0}	–
Te	Bolt (fuel tank bracket mounting)	70 to 90 {52 to 66, 7.1 to 9.2}	–

M E M O

FUEL TANK <IN SIDE FRAME TYPE>

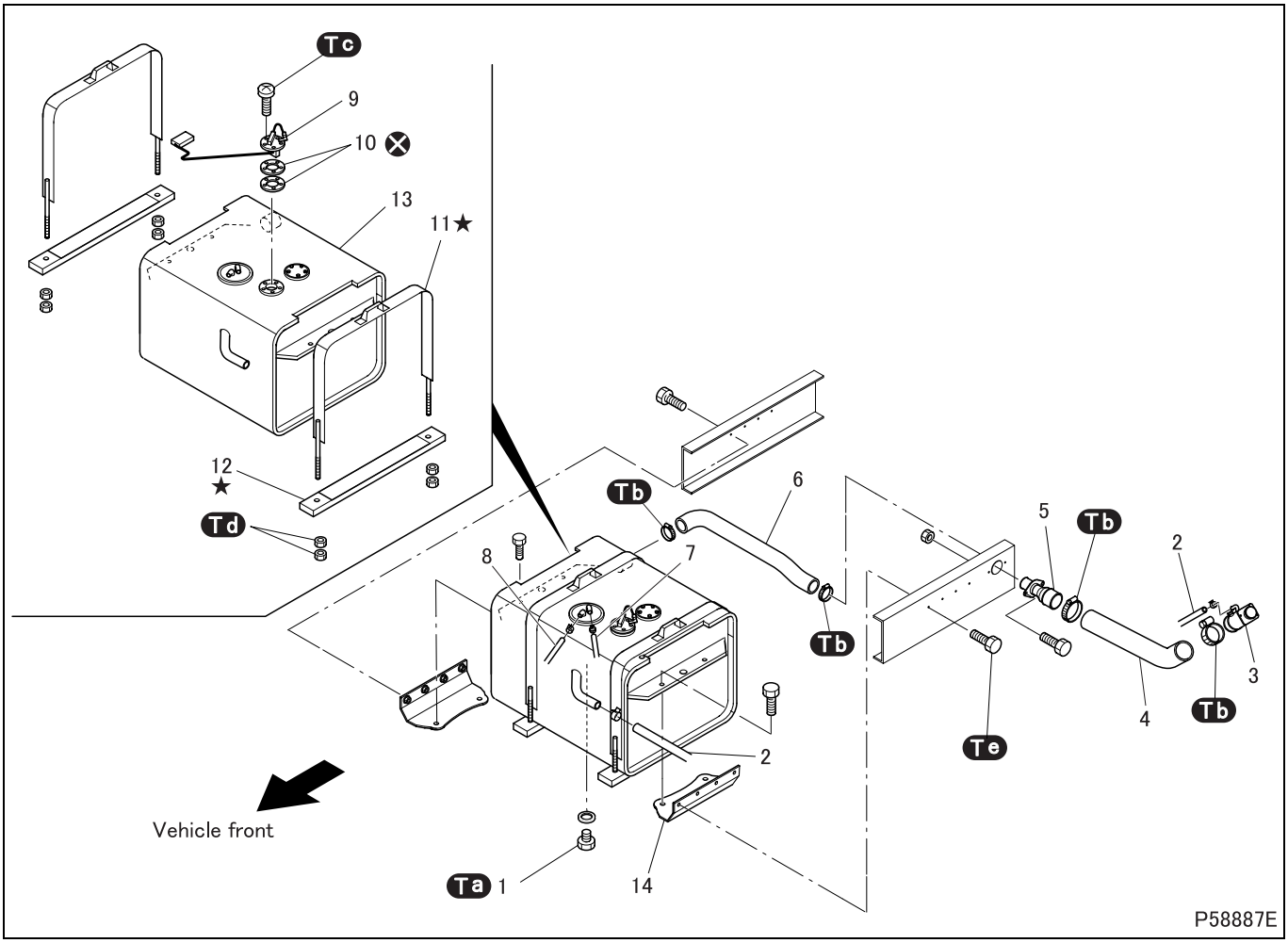

● **Removal sequence**

1	Drain plug	**6**	Fuel hose	★ **11**	Fuel tank band
2	Air vent tube	**7**	Suction hose	★ **12**	Fuel tank support
3	End filler	**8**	Return hose	**13**	Fuel tank
4	Fuel hose	**9**	Fuel lever sensor	**14**	Fuel tank bracket
5	Fuel pipe	**10**	Gasket	⊗:	Non-reusable parts

DANGER ⚠

- **Do not allow any flames or sources of heat near the fuel tank, as it may explode.**

WARNING ⚠

- **Fuel is highly flammable. Keep it away from flames and sources of heat.**
- **To avoid risk of fire, wipe up any spilled fuel.**

CAUTION ⚠

- **Install the air vent tube without deformation or slack because it causes shrilling fuel refueling.**

NOTE

- **The parts indicated with the mark ★ should never be removed, loosened or moved unless they are defective.**

● **Installation sequence**

Follow the removal sequence in reverse.

Tightening torque (Unit: N·m {ft.lbs, kgf·m})

Mark	Parts to be tightened	Tightening torque	Remarks
Ta	Drain plug	29.4 ± 4.9 {22 ± 3.6, 3.0 ± 0.5)	–
Tb	Clamp	3.9 ± 1.0 {2.9 ± 0.7, 0.4 ± 0.1)	–
Tc	Screw (fuel level sensor mounting)	0.98 to 1.47 {0.7 to 1.1, 0.10 to 0.15}	–
Td	Nut (fuel tank band mounting)	3 to 4 {2.2 to 3.0, 0.3 to 0.4}	–
Te	Bolt (fuel tank bracket mounting)	70 to 90 {52 to 66, 7.1 to 9.2}	–

◆Inspection procedure◆

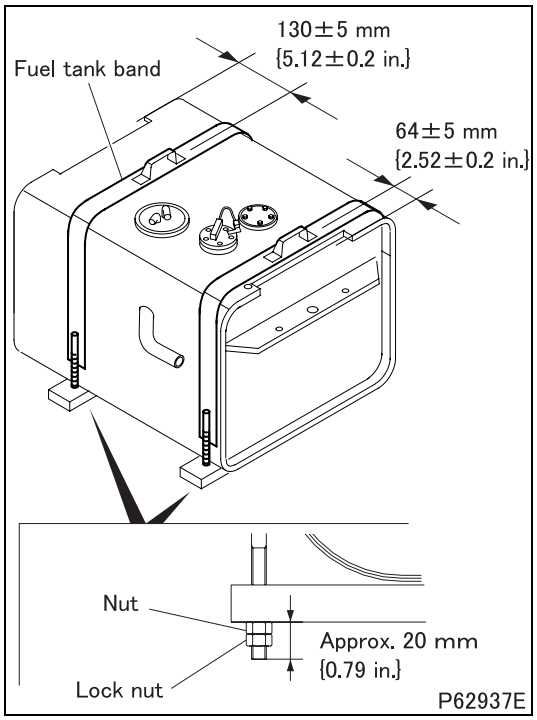

■ **Installation: Fuel tank band**

- Install the fuel tank band so that the position of the band and the protrusion of the band thread is as illustrated.

CAUTION ⚠

- **Install the fuel tank band so that the band isn't over the protrusion of the fuel tank.**

- Tighten the nuts alternately so that the fuel tank contacts the fuel support in order symmetry and evenly.
- After tightening the nuts to the specified torque, tighten the lock nut the specified torque.

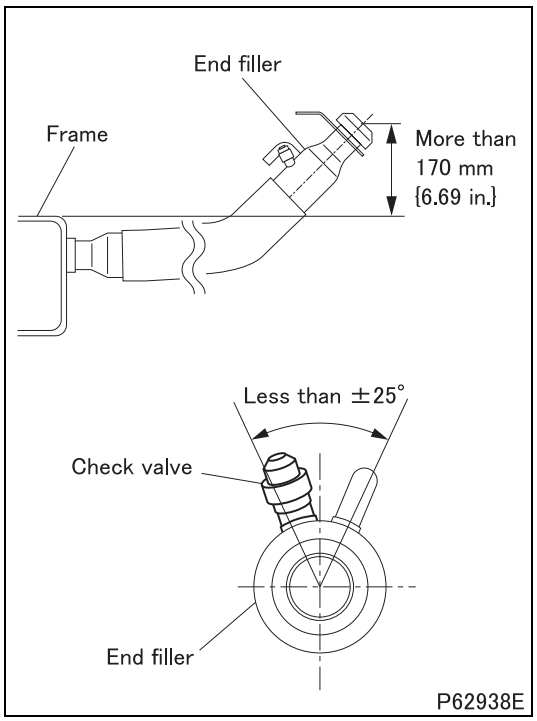

■ **Installation: End filler**

- Install the end filler so that the installing positions of the end filler mouth and the check valve are as illustrated.

FUEL FILTER

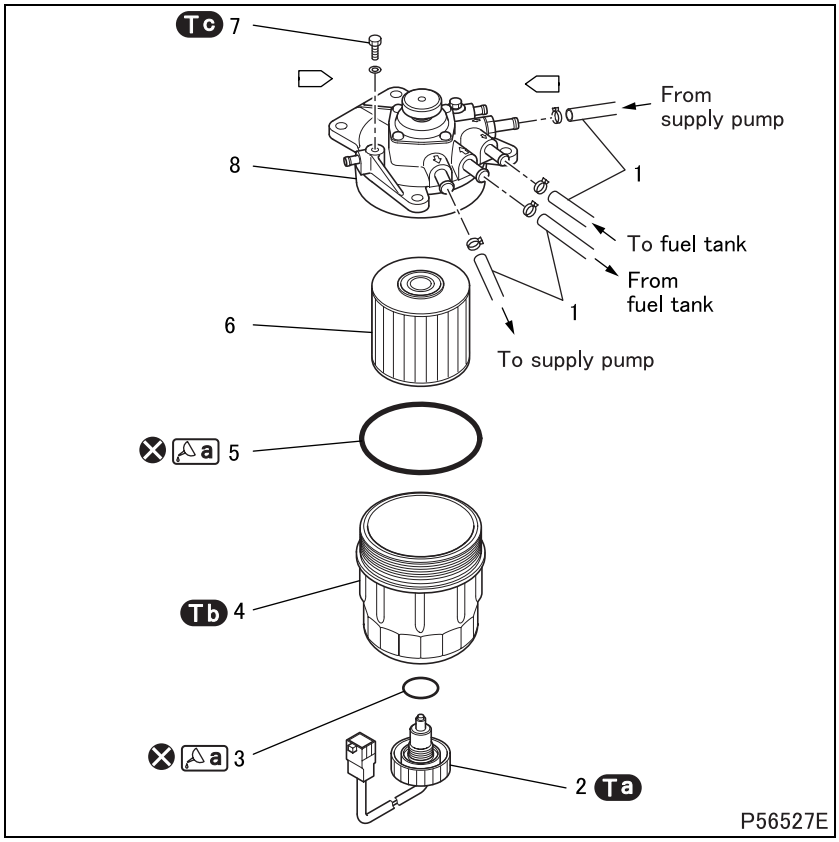

● Disassembly sequence

1 Fuel hose
2 Water separator sensor
3 O-ring
4 Case
5 O-ring
6 Filter element
7 Plug
8 Fuel filter head

⊗: Non-reusable parts

● Assembly sequence

Follow the disassembly sequence in reverse.

Tightening torque (Unit: N·m {ft.lbs, kgf·m})

Mark	Parts to be tightened	Tightening torque	Remarks
Ta	Water separator sensor	5 ± 1 {3.7 ± 0.7, 0.5 ± 0.1}	–
Tb	Case	30 ± 2 {22 ± 1.5, 3.1 ± 0.2}	–
Tc	Plug	10 ± 2 {7.4 ± 1.5, 1 ± 0.2}	–

Lubricant and/or sealant

Mark	Points of application	Specified lubricant and/or sealant	Quantity
a	O-ring	Engine oil	As required

Special tools

Mark	Tool name and shape	Part No.	Application
a	Filter wrench 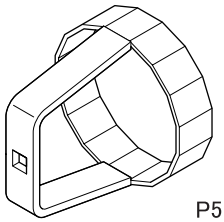 P57179	MH063203	Removal and installation of case

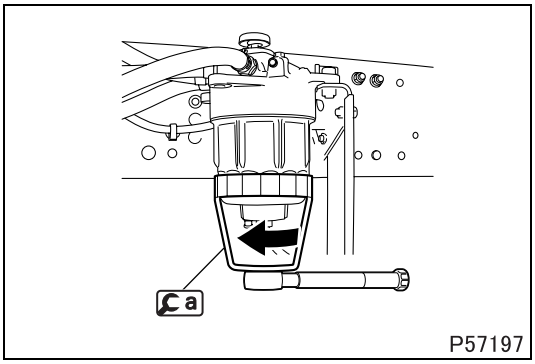

■ **Removal: Case**

- Loosen the water separator sensor and drain fuel from the case.
- Remove the case using a.

◆Installation procedure◆

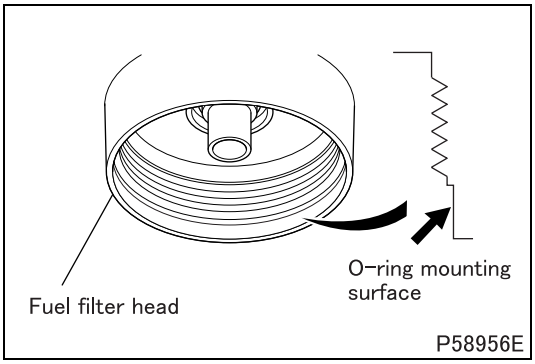

■ **Installation: Case**

- Clean the O-ring mounting surface of the fuel filter head.

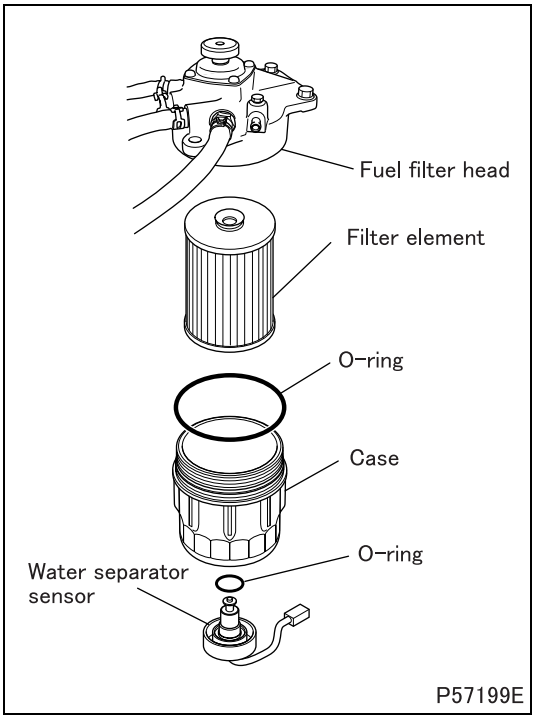

- Replace the filter element and O-ring with new one.
- Apply a thin coat of engine oil to the O-ring, and install it on the case and water separator sensor.

CAUTION ⚠

- **Be sure to use only genuine MITSUBISHI filter elements. The use of non-genuine fuel filters can cause engine failure.**
- **Prevent fine dust particles from entering the fuel filter and fuel pipe, as they can cause problems such as faulty fuel injection.**

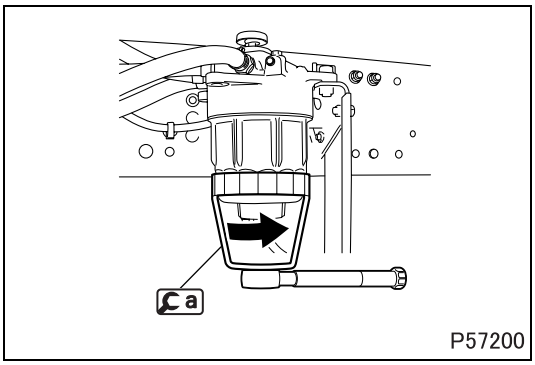

- Use a to tighten the case to the specified torque.
- Install the water separator sensor, and then air-bleed the fuel system.
- Start the engine, and check that there is no fuel leakage.
- Reinstall the fuel filter if there is any leakage.

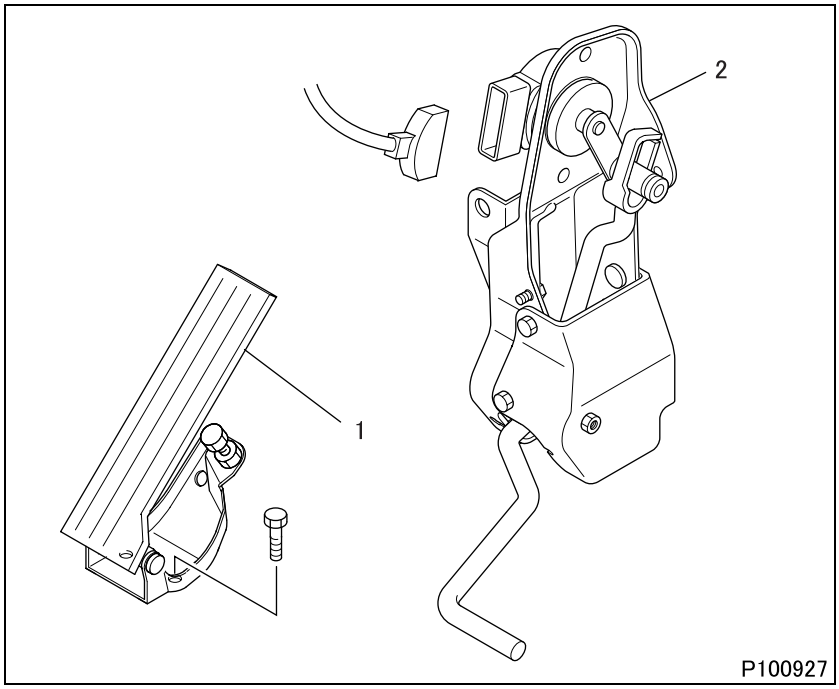

● **Removal sequence**

1. Accelerator pedal (See later sections.)
2. Accelerator link (See later sections.)

● **Installation sequence**

Follow the removal sequence in reverse.

◆Removal procedure◆

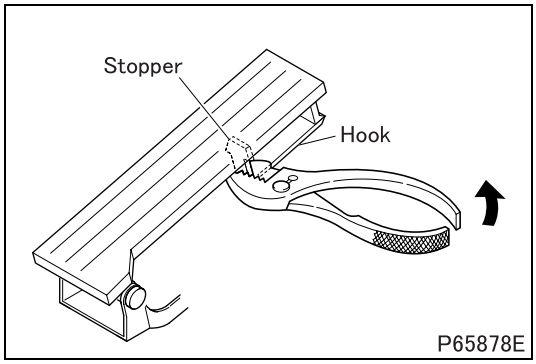

■ **Removal: Accelerator pedal**

- Using pliers, pinch the hook of the stopper on the accelerator pedal. Separate the stopper from the pedal while turning the hook by about 15 degrees.

CAUTION ⚠

- **Do not yank on the stopper, as this may damage it.**

◆Installation procedure◆

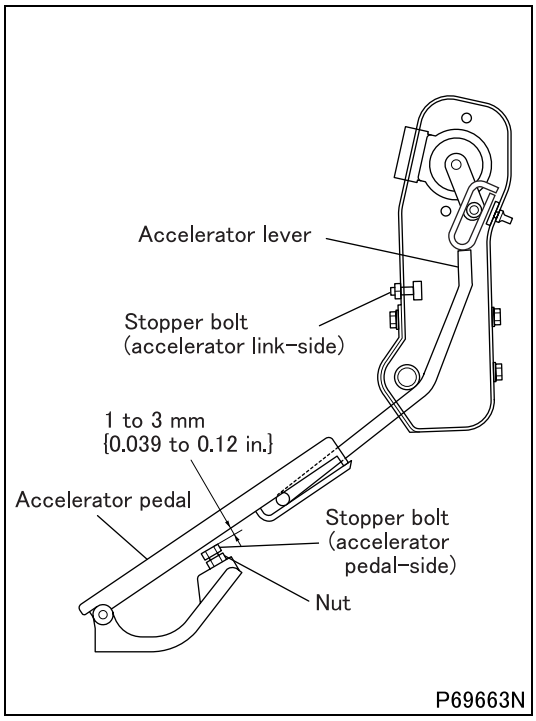

■ **Installation: Accelerator pedal**

- Press the accelerator pedal until the accelerator lever touches the accelerator link stopper bolt.
- Check that the clearance between the stopper and the stopper bolt contact surface of the pedal is as indicated in the illustration.
- If the clearance is not within the indicated value range, adjust the stopper bolt and lock it with the nut.

Accelerator Pedal

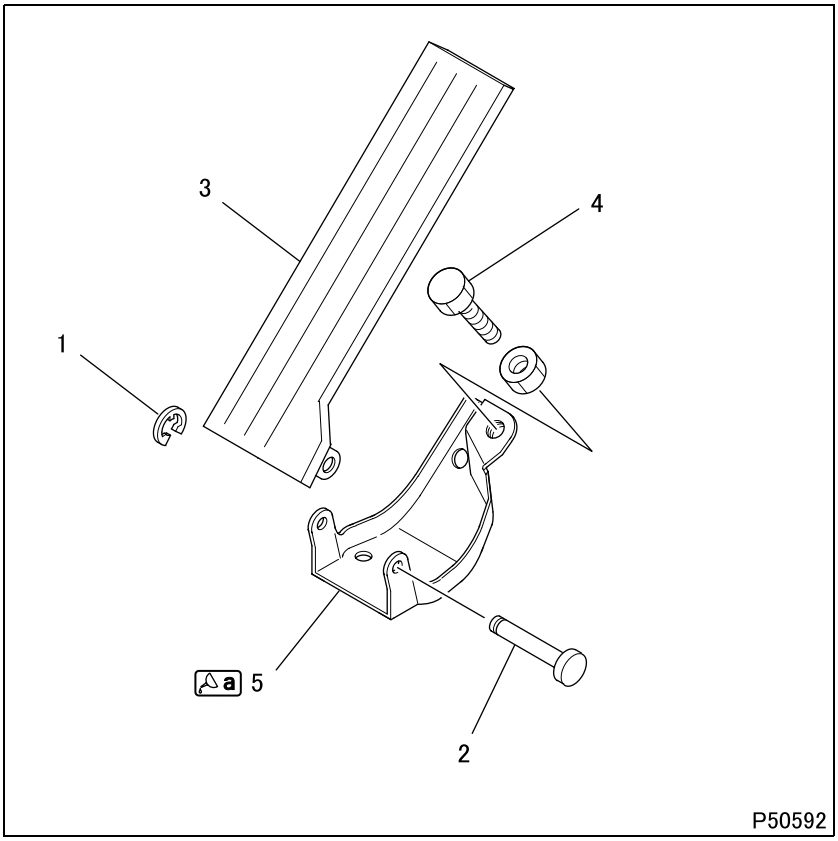

● Disassembly sequence

1 E-ring
2 Clevis pin
3 Accelerator pedal
4 Stopper bolt
5 Accelerator pedal bracket

● Assembly sequence

Follow the disassembly sequence in reverse.

Lubricant and/or sealant

Mark	Points of application	Specified lubricant and/or sealant	Quantity
a	Accelerator pedal and bracket contact surfaces	Chassis grease [NLGI No. 1 (Li soap)]	As required

Accelerator Linkage

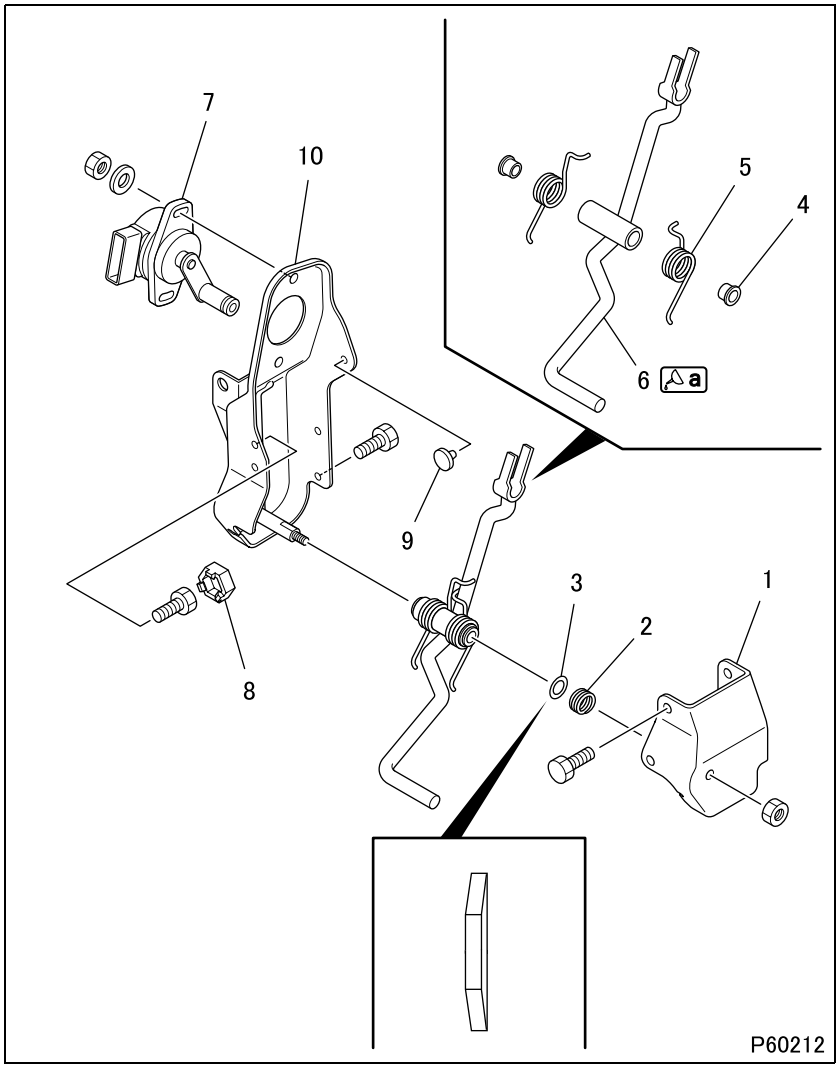

● Disassembly sequence

1 Cover
2 Spring
3 Washer
4 Bushing
5 Return spring
6 Accelerator lever
7 Accelerator position sensor and accelerator switch assembly
8 Lever stopper
9 Rubber stopper
10 Accelerator link bracket

● Assembly sequence

Follow the disassembly sequence in reverse.

NOTE

- **Inspection and adjustment of accelerator position sensor (See Gr13E).**

Lubricant and/or sealant

Mark	Points of application	Specified lubricant and/or sealant	Quantity
a	Accelerator lever and return spring sliding surface	Chassis grease [NLGI No. 1 (Li soap)]	As required

M E M O

COMMON RAIL

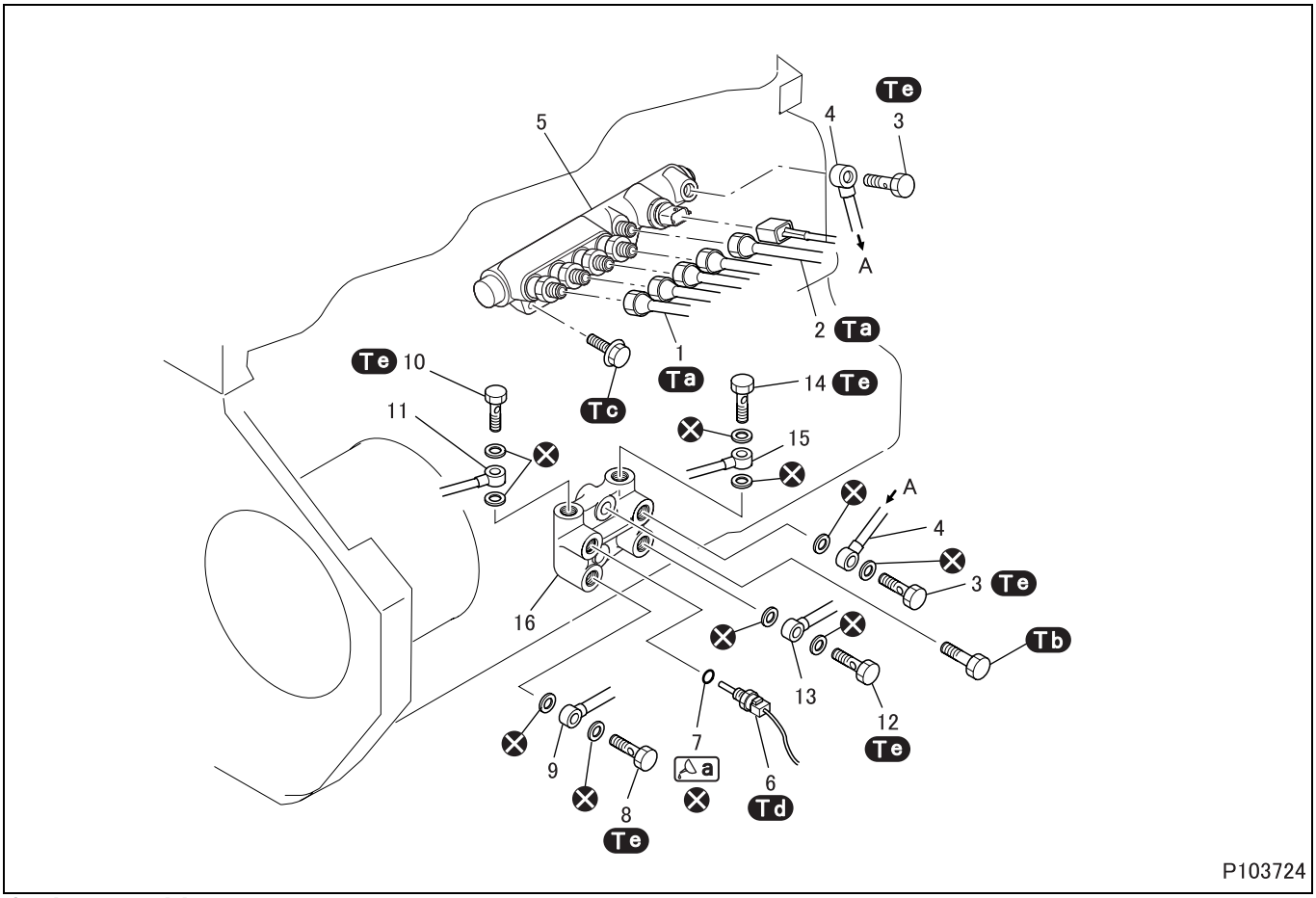

● **Disassembly sequence**

1	Injection pipe	**7**	O-ring	**13**	Fuel return pipe A
2	Fuel pipe	**8**	Eyebolt	**14**	Eyebolt
3	Eyebolt	**9**	Fuel suction pipe B	**15**	Fuel return pipe C
4	Fuel return pipe B	**10**	Eyebolt	**16**	Adaptor
5	Common rail	**11**	Fuel suction pipe A		
6	Fuel temperature sensor	**12**	Eyebolt	⊗:	Non-reusable parts

WARNING ⚠

- **Fuel is highly flammable. Do not handle it near flames or heat.**
- **Spilled fuel may catch fire and therefore, must be wiped off completely.**

CAUTION ⚠

- **Contact each seating surface fully and evenly, tighten the bolt or nut temporarily, and finally tighten it to the specified torque.**
- **For servicing the common rail, contact a BOSCH service station.**
- **If dust enters the common rail, the engine performance will be greatly affected. To prevent it, be sure to cover up openings left after pipes and other parts are removed. Also, wash eyebolts, gaskets, etc. in light oil to clear of dirt.**
- **Before installing, make sure that the seat surfaces of fuel pipes and injection pipes are free of scratches and irregularities.**

- Contact Bosch service station for any service needs of the common rail.

● Assembly sequence

Follow the disassembly sequence in reverse.

Tightening torque (Unit: N·m {ft.lbs, kgf·m})

Location	Parts to be tightened	Tightening torque	Remarks
Ta	Injection pipe	30.4 to 35 {22 to 26, 3.1 to 3.6}	–
	Fuel pipe		
Tb	Bolt (adaptor mounting)	46 {34, 4.7}	–
Tc	Bolt (common rail mounting)	33 {24, 3.4}	–
Td	Fuel temperature sensor	17.6 to 21.5 {13 to 16, 1.8 to 2.2}	–
Te	Eyebolt (fuel suction pipe mounting)	39 {29, 4.0}	–
	Eyebolt (fuel return pipe mounting)		

Lubricant and/or sealant

Mark	Points of application	Specified lubricant and/or sealant	Quantity
a	O-ring	Engine oil	As required

Special tools (Unit: mm {in.})

Mark	Tool name and shape	Part No.	Application
a	Socket wrench A: 17 {0.67} 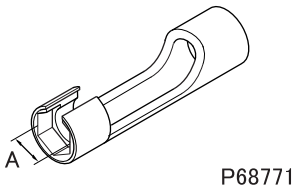 	MH063020	Removal and installation of injection pipe and fuel pipe

◆Removal procedure◆

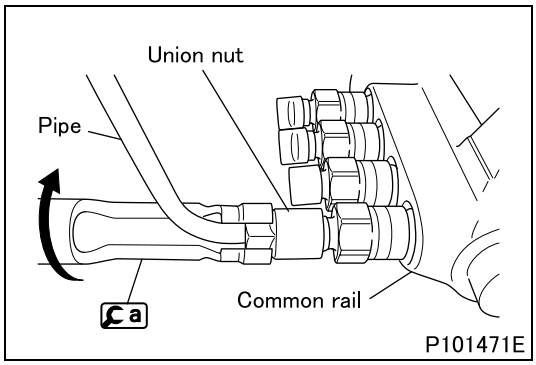

■ Removal: Injection pipe and fuel pipe

- Position a on the pipe and then loosen the union nut.

◆Installation procedure◆

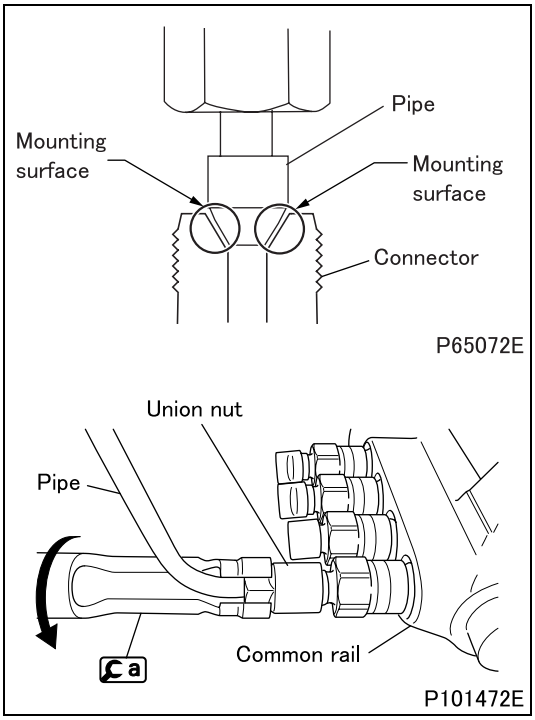

■ **Installation: Injection pipe and fuel pipe**

- Ensure that the pipe and mounting surfaces of the connector are flat and free from damage.
- Bring the pipe into intimate contact with mounting surfaces of the connector evenly, and temporarily tighten it without applying an excessive force.
- After temporary tightening, position the torque wrench on a and then tighten them to the specified torque.

M E M O

SUPPLY PUMP

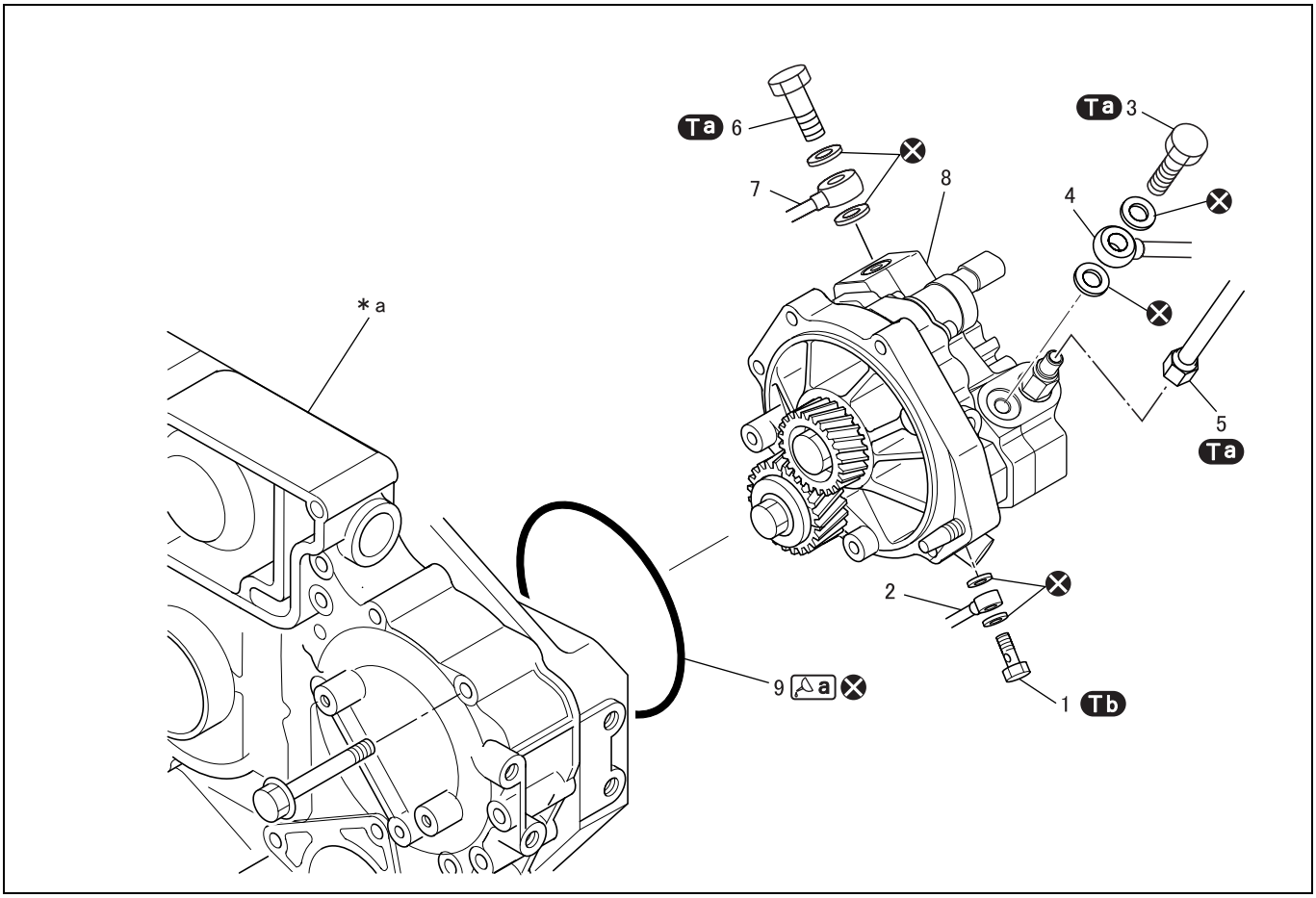

● Removal sequence

1 Eyebolt
2 Oil pipe
3 Eyebolt
4 Fuel return pipe C
5 Fuel pipe
6 Eyebolt (with gauze filter)
7 Fuel suction pipe A
8 Supply pump
9 O-ring

***a**: Front case
⊗: Non-reusable parts

CAUTION ⚠

- **Contact each seating surface fully and evenly, tighten the bolt or nut temporarily, and finally tighten it to the specified torque.**
- **Have the injection pump assembly serviced by a BOSCH service station.**
- **Dirt and dust in the injection pump assembly can seriously detract from engine performance. To prevent this from happening, fully cover all open joints after removing any pipes or hoses.**

● Installation sequence

Follow the removal sequence in reverse.

CAUTION ⚠

- **Make sure that the harness (marked with " ★ ") of MPROP (rail pressure control valve) is connected to the supply pump before starting the engine. Starting the engine without connection causes a malfunction.**

Tightening torque (Unit: N·m {ft.lbs, kgf·m})

Mark	Parts to be tightened	Tightening torque	Remarks
Ta	Fuel pipe	25 {18, 2.6}	–
	Eyebolt (fuel return pipe C mounting)		
	Eyebolt (fuel suction pipe A mounting)		
Tb	Eyebolt (oil pipe mounting)	21 {15, 2.1}	–

Lubricant and/or sealant

Mark	Points of application	Specified lubricant and/or sealant	Quantity
a	O-ring	Engine oil	As required

Special tools

Mark	Tool name and shape	Part No.	Application
a	Cranking handle 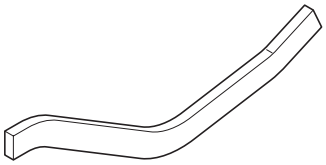 P58299	MH063704	Rotating the fan pulley

◆Installation procedure◆

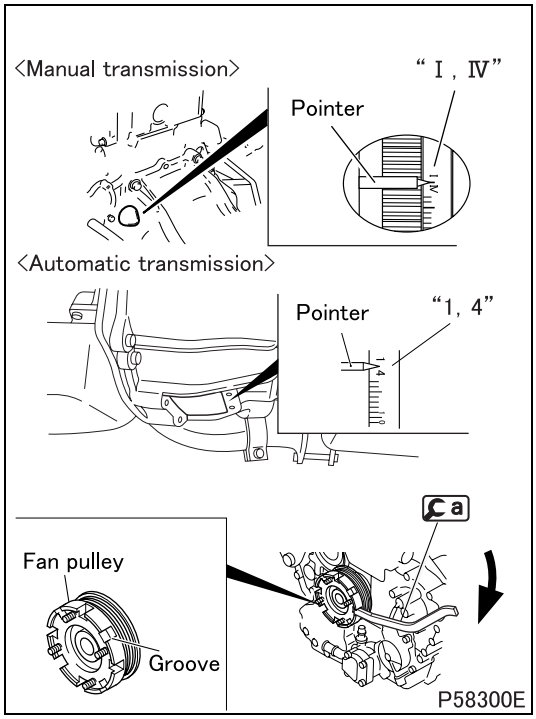

■ **Installation: Supply pump**

- Remove the rocker cover.
- Bring the No. 1 cylinder piston to the top dead center (TDC) on the compression stroke by the following procedure:
- Hook a on a groove in the fan pulley.
- Turn the fan pulley in the illustrated direction so that the pointer is aligned with the "I – IV" or "1 – 4" mark on the inscribed scale on the flywheel.
- This will place either the No. 1 or No. 4 cylinder piston at TDC on the compression stroke. The cylinder in which the rocker arms for both the intake and exhaust valves can be pushed down by hand by the valve clearance amounts has its piston at TDC. Rotate the engine by one full turn to switch the TDCs of the No. 1 and No. 4 cylinder pistons.

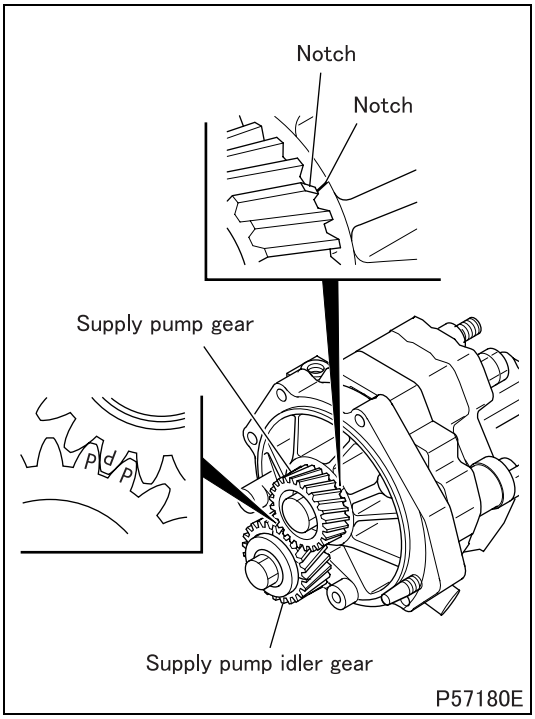

- Align the match mark “P” on the supply pump idler gear with that of the supply pump gear.
- Align the notch on the flange plate with the notch on the supply pump gear.
- Check that the notch on the flange plate and the notch on the supply pump gear are correctly aligned, and then push the supply pump.

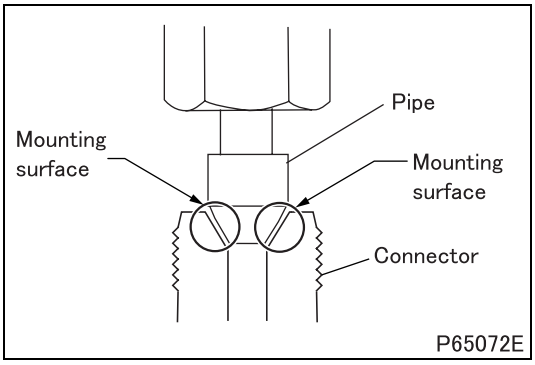

■ **Installation: Fuel pipe**

- Ensure that the pipe and mounting surfaces of the connector are flat and free from damage.
- Bring the pipe into intimate contact with mounting surfaces of the connector evenly, and temporarily tighten it without applying an excessive force.
- Tighten it to the specified torque after temporary tightening.

M E M O

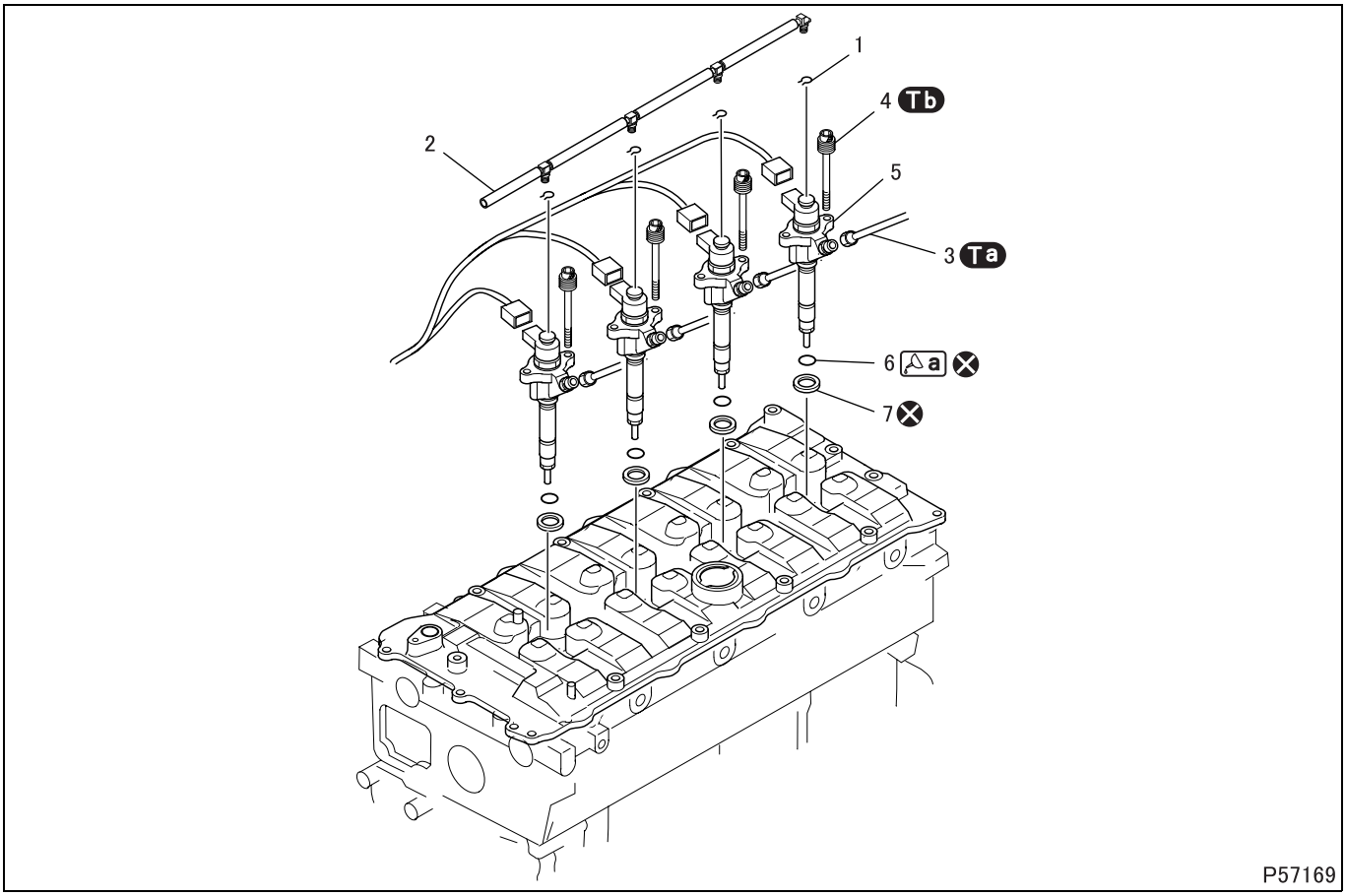

● Disassembly sequence

1 Snap ring
2 Fuel return hose
3 Injection pipe
4 Bolt (with hexagonal hole)
5 Injector
6 O-ring
7 Nozzle gasket

⊗: Non-reusable parts

● Assembly sequence

Follow the disassembly sequence in reverse.

WARNING ⚠

- **Before removing the injectors, always turn the starter switch to the LOCK position.**
- **Fuel is highly flammable. Wipe up spilled fuel to avoid the risk of fire.**

CAUTION ⚠

- **Contact each seating surface fully and evenly, tighten the bolt or nut temporarily, and finally tighten it to the specified torque.**
- **When removing the injectors, take care not to strike them with the tool, etc.**
- **To prevent an injection failure or any other trouble, make sure that no dust enters the injectors and injection pipes.**

Tightening torque (Unit: N·m {ft.lbs, kgf·m})

Mark	Parts to be tightened	Tightening torque	Remarks
Ta	Injection pipe (union nut mounting)	30.4 to 35 {22 to 26, 3.1 to 3.6}	–
Tb	Bolt (injector mounting)	5.2 to 7.2 {3.8 to 5.3, 0.53 to 0.73}	–

Lubricant and/or sealant

Mark	Points of application	Specified lubricant and/or sealant	Quantity
a	O-ring	Engine oil	As required

CAUTION ⚠

- **Do not attempt to clean the nozzle hole with a wire brush or other similar tools, or the hole can be damaged.**
- **Be sure to tighten the nozzle bridge bolts to the specified torque. Overtightening the bolts can deform the injectors, resulting in incorrect fuel injection.**
- **If an injector is replaced with a new one, the injector correction data must be written in the engine electronic control unit.**
- **For the data writing work, consult your nearest STERLING TRUCKS dealer or STERLING TRUCKS CORPORATION.**

Tightening torque (Unit: N·m {ft.lbs, kgf·m})

Mark	Parts to be tightened	Tightening torque	Remarks
Ta	Injection pipe	30.4 to 35 {22 to 26, 3.1 to 3.6}	–
Tb	Bolt (injector mounting)	5.2 to 7.2 {3.8 to 5.3, 0.53 to 0.73}	–

Lubricant and/or sealant

Mark	Points of application	Specified lubricant and/or sealant	Quantity
a	O-ring	Engine oil	As required

Special tools (Unit: mm {in.})

Mark	Tool name and shape	Part No.	Application
a	Socket wrench A: 17 {0.67} 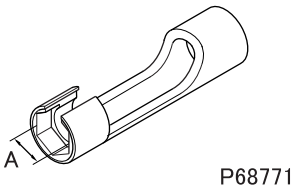	MH063020	Removal and installation of injection pipe

◆Removal procedure◆

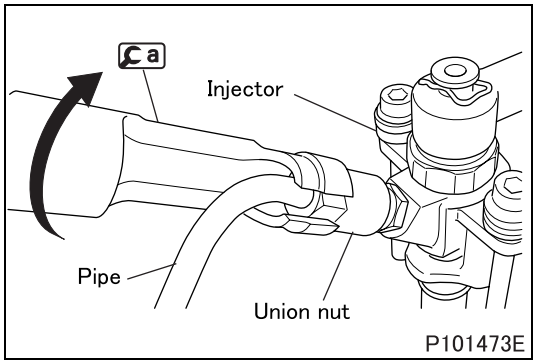

■Removal: Injection pipe

- Position a on the pipe and then loosen the union nut.

◆Installation procedure◆

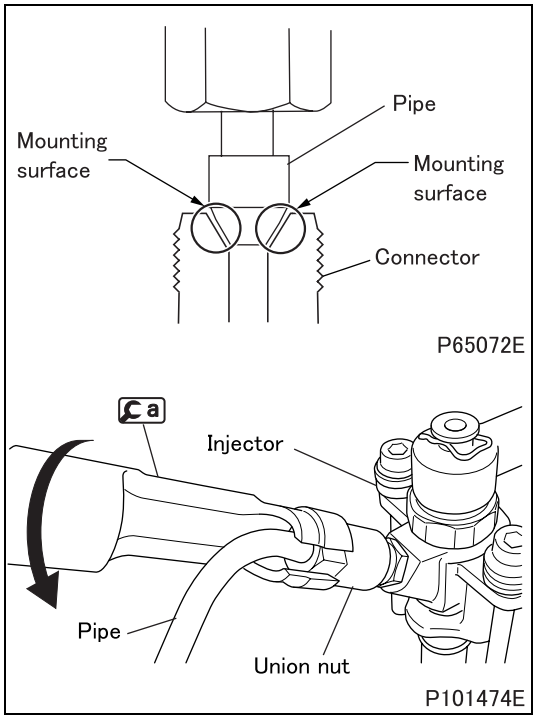

■Installation: Injection pipe

- Ensure that the pipe and mounting surfaces of the connector are flat and free from damage.
- Bring the pipe into intimate contact with mounting surfaces of the connector evenly, and temporarily tighten it without applying an excessive force.
- After temporary tightening, position the torque wrench on a and then tighten them to the specified torque.